National University of Computer and Emerging Sciences, Lahore Campus

Course Name:	Computer Networks	Course Code:	CS 3001
Program:	BS (Data Science)	Semester:	Spring 2025
Duration:	15 minutes	Total Marks:	15
Paper Date:	11- February -2025	Section	8A
Exam Type:	Quiz 1 - Chapter 1	Page(s):	2

Student Name solution Roll No. Section:

Q1. Encircle the correct option: [5 marks]

1. If the size of packet is increased the traffic intensity _____ and if the bandwidth is increased traffic intensity ___
   a) increases, decreases
   b) increases, increases
   c) decreases, increases
   d) decreases, decreases
2. Server is a part of
   a) Network edge
   b) Core network
   c) both
   d) none
3. Calculate the Bandwidth-Delay Product if the data rate is 100 Mbps and the round trip delay time is 10 milliseconds.
   a) 100 Mbit
   b) 1 Gbit
   c) 1 Mbit
   d) 10 Gbit

True/False:

1. OSI/ISO and TCP/IP Service Model consists of 5 and 7 layers respectively. [T / F]

2. In a store-and-forward network, the entire message must be received and stored at an intermediate nod before it is forwarded to the next destination. [T / F]

CamScanner

Q2. Consider the figure below, with three links, each with the specified transmission rate and link length. **[8+1+1=10 marks]**

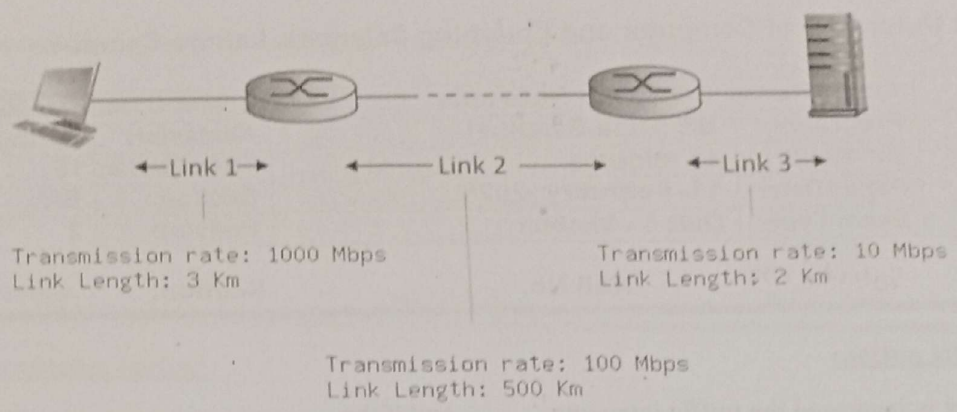

i. Find the **end-to-end delay** (including the transmission delays and propagation delays on each of the three links, but ignoring queueing delays and processing delays) from when the left host begins transmitting the first bit of a packet to the time when the last bit of that packet is received at the server at the right. The speed of light propagation delay on each link is 3×10^8 m/sec. Note that the **transmission rates are in Mbps** and the **link distances are in Km**. Assume a **packet length of 16000 bits**. Give your **answer in milliseconds.**

$d_{trans} = \frac{L}{R}$

$d_{prop} = \frac{d}{s}$

$d_{T_{Link1}} = \frac{16000 \text{ bits}}{1000 \text{ Mbps}} = 0.016 \text{ ms}$

Link 2: $\frac{16000}{100\times10^6} = 0.16 \text{ ms}$

Link 3: $\frac{16000}{10\times10^6} = 1.6 \text{ ms}$

$d_1 = \frac{3\times10^3}{3\times10^8} = 0.01 \text{ ms}$

$d_2 = \frac{500\times10^3}{3\times10^8} = 1.67 \text{ ms}$

$d_3 = \frac{2\times10^3}{3\times10^8} = 0.0067 \text{ m}$

$D_{endTo end} = \Sigma D_{Trans} + \Sigma D_{p}$

$= (0.016 + 0.16 + 1.6) + (0.0$

~~$= 1.1761 \text{ ms}$~~

$D_{endTo end} = 3.39 \text{ ms}$

ii. Also give the **throughput** between client and server.

~~Thou~~

Throughput = 10 Mbps